"CHANNEL" PROFILE SYSTEM
SERIES DSC

— TECHNICAL DATA
— COMPONENTS
— INSTALLATION
— MAINTENANCE

donati

QUALITY SYSTEM CERTIFICATION NO. 011470 ACCORDING TO EN ISO 9001:1994

"Canal" - type channel section monorails and bridge cranes

The modular "Canal" elements are cold-pressed channel sections specifically designed to provide the craneway for the electrical chain hoists of the DMK series.
These elements are the key items of a modular load hoisting and handling system that is simple and quick to assemble.
The installation, modification or change of installation site procedure of this system is very simple, as it includes only standard bolted modules, and thus frees the user from the need to perform expensive and time consuming welding operations.
This system is very flexible, and easily expandable.

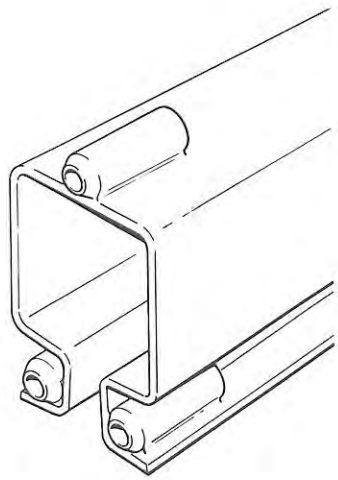

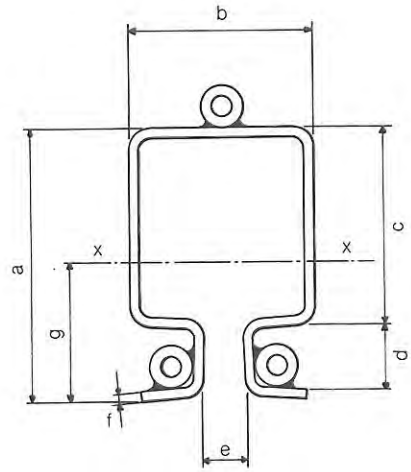

Legend:

CP = Small "canal" channel section
CG = Large "canal" channel section
CRG = Strengthened "canal" channel section

Dimensions and static characteristics

Reference	a	b	c	d	e	f	g	Mass kg	Wx min cm^3	Jx cm^4
P	110	76	81	25	16	4	55,8	11,5	38,5	214,7
G	167	100	132	30	25	5	84,5	20,5	101	864,2
GR	167	100	132	30	25	5	80,7	29,5	192	1551

Design Characteristics

The craneways for bridge cranes DSC are designed to be attached to structures such as pillars, walls, ceilings, beams, trusses, machine bodies, etc.
The attaching members are swiveling tie-rods that are secured to the structures with screw clamps, bolts, screw anchors or chemically bonded anchors.

The User shall define a general layout of the main characteristics of each installation based on the required performance and the load carrying capacity of the supporting structures. The layout shall be prepared and checked by qualified specialists able to assess the performance level that can be achieved by the installation and the impact of the installation on the stability of the supporting structures.

The installation design can be prepared based on the information contained in the catalogue concerning the "canal" channel sections, taking note of the following additional data:

1) the beams (position 4) shown on the figure in the installation procedure are available for most standardized channel sections. For installations in reinforced "cls" structures or similar structures, it is essential that adjustment or modification be verified in each single case.
2) in case the tie-rods (position 1) are longer than 500 mm, install simple or double crosses. Choose the cross according to the following parameters:
   a) a double cross every 10 m of channel section is usually necessary in the case of twin craneways where only one bridge crane is installed. The crosses shall be installed on both ways if the center to center distance is bigger than 5 m, on one way only if the center to center distance is shorter;
   b) in the case of twin craneways with more than one bridge crane installed, a simple cross shall be installed at approximately half-distance between the double crosses;
   c) in the case of single craneways, install only a double cross every 10 m.

Channel profile system series DSC
Monorail

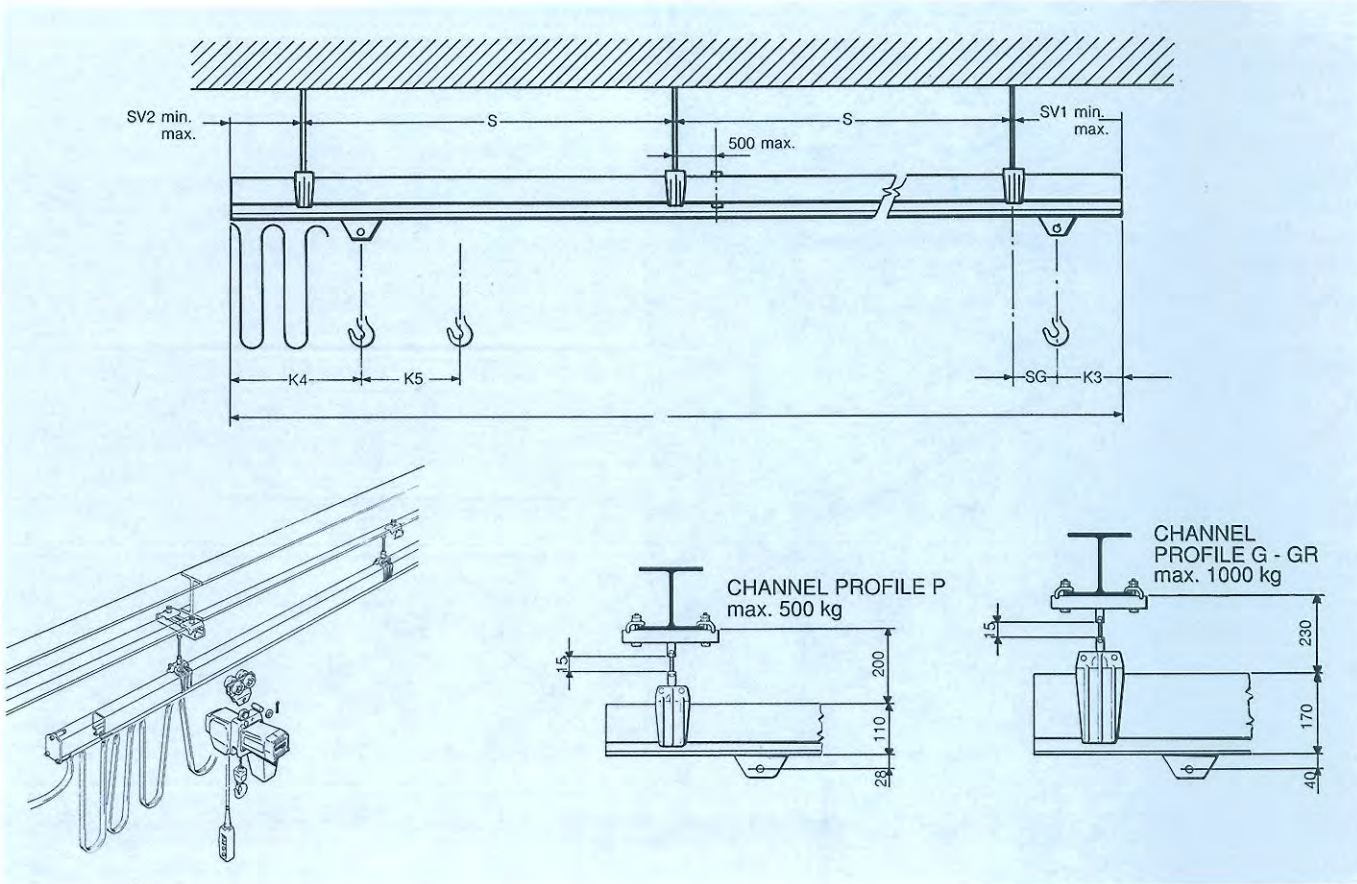

Monorail dimensions

Capacity kg/daN	Interaxis anchorage S m	Runway profile Type	Hook overhang mm SG Max.	Runway profile overhang mm SV1 Min.	SV1 Max.	SV2 Min.	SV2 Max.	Approach mm K3	Eventual 2nd hoist K5
125	3	CP	100	50	200	50	K4 + 100	100	to be defined
		CG	200	100	320	100	K4 + 200	120	"
	4	CP	225	50	325	50	K4 + 225	100	"
		CG	350	100	470	100	K4 + 350	120	"
	5	CP	350	50	450	50	K4 + 350	100	"
		CG	550	100	670	100	K4 + 500	120	"
	6	CG	800	100	920	100	K4 + 800	120	"
	7	CG	1000	100	1120	100	K4 + 1000	120	"
250	3	CP	50	50	150	50	K4 + 50	100	"
		CG	150	100	270	100	K4 + 150	120	"
	4	CP	130	50	230	50	K4 + 130	100	"
		CG	250	100	370	100	K4 + 250	120	"
	5	CG	350	100	470	100	K4 + 350	120	"
	6	CG	500	100	620	100	K4 + 500	120	"
	7	CG	650	100	770	100	K4 + 650	120	"
500	3	CG	80	100	330	100	K4 + 80	250	"
	4	CG	150	100	400	100	K4 + 150	250	"
	5	CGR	200	100	450	100	K4 + 200	250	"
	6	CGR	300	100	550	100	K4 + 300	250	"
	7	CGR	400	100	650	100	K4 + 400	250	"
1000	3	CG	40	100	290	100	K4 + 40	250	"
	4	CGR	70	100	320	100	K4 + 70	250	"
	5	CGR	100	100	350	100	K4 + 100	250	"

Channel profile system series DSC
Single beam bridge crane

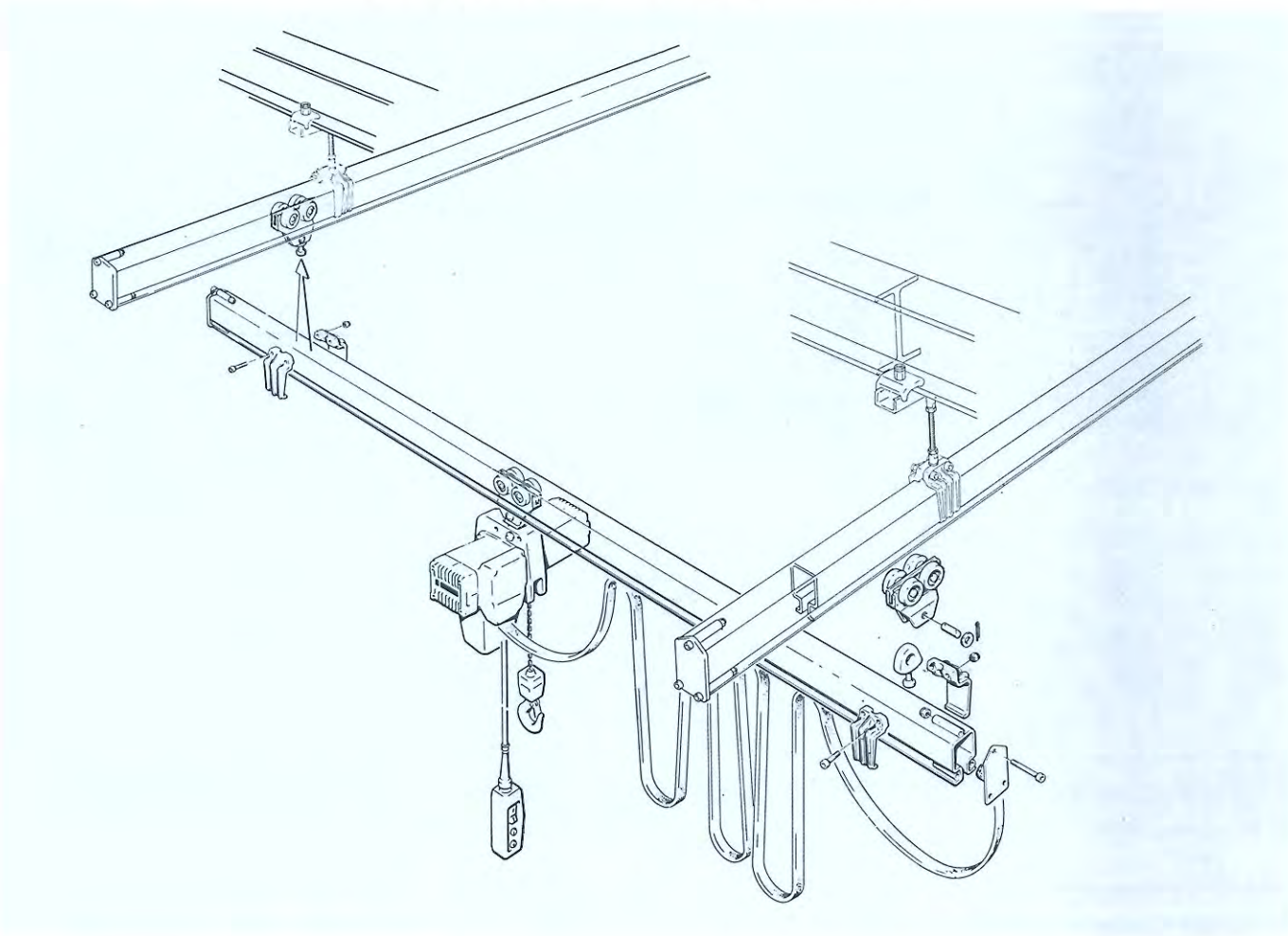

Runway in channel profile P - Bridge in channel profile P

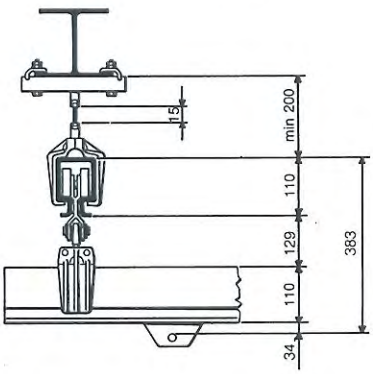

Runway in channel profile P - Bridge in channel profile G

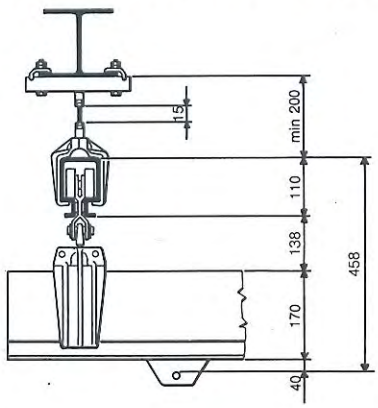

Runway in channel profile G - Bridge in channel profile P

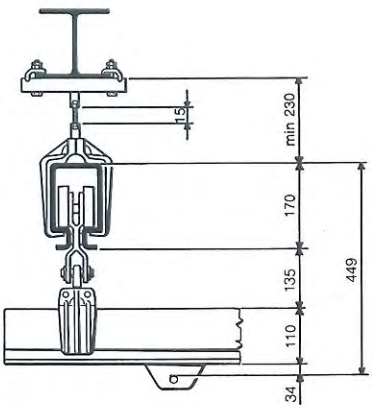

Runway in channel profile G - Bridge in channel profile G

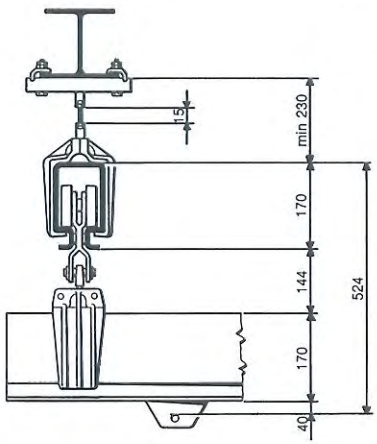

Channel profile system series DSC
Single beam bridge crane

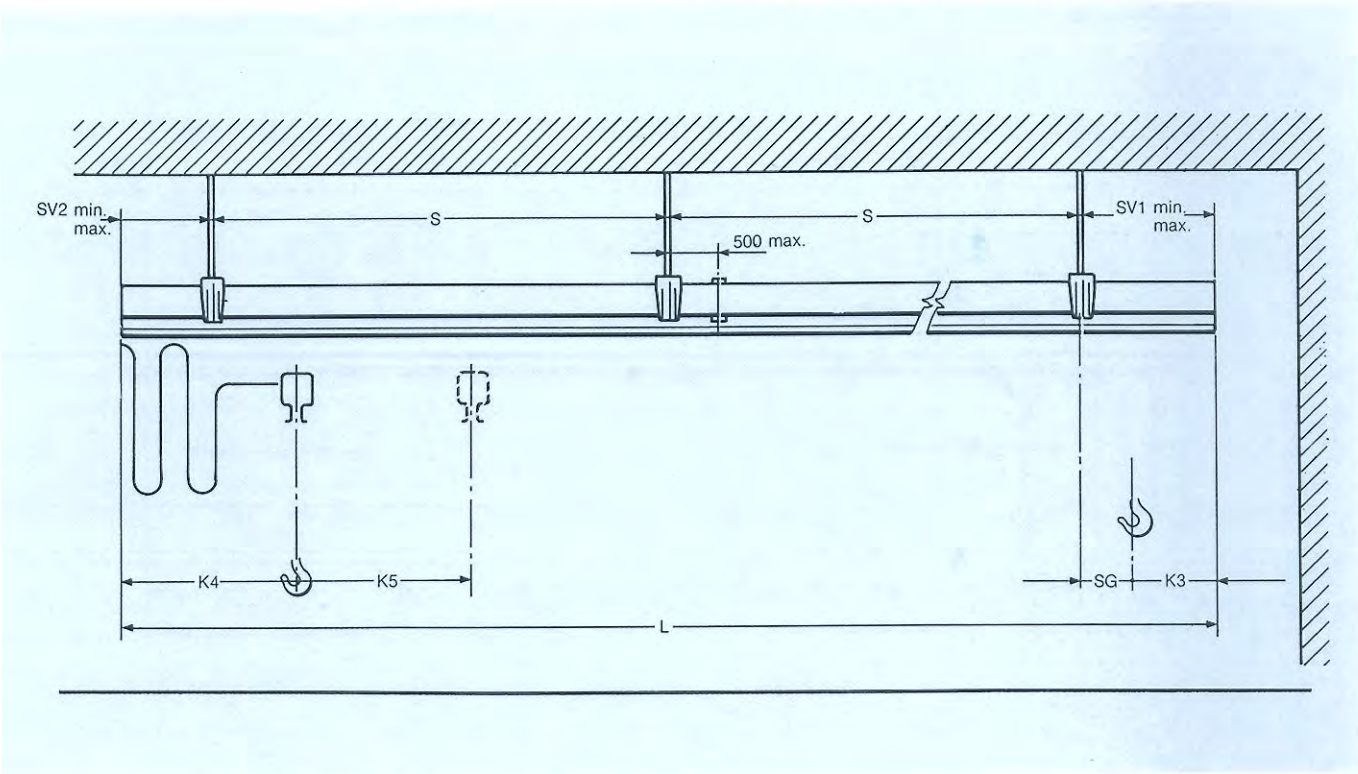

Runway dimensions for single beam bridge crane

Capacity kg/daN	Interaxis anchorage S m	Runway profile Type	Hook overhang mm SG Max.	Runway profile overhang mm SV1 Min.	SV1 Max.	SV2 Min.	SV2 Max.	Approach mm K3	Eventual 2nd bridge K5
125	3	*CP	100	50	200	50	K4 + 100	100	
		CG	200	100	320	100	K4 + 200	120	500
	4	*CP	225	50	325	50	K4 + 225	100	
		CG	350	100	470	100	K4 + 350	120	500
	5	*CP	350	50	450	50	K4 + 350	100	
		CG	550	100	670	100	K4 + 550	120	500
	6	CG	800	100	920	100	K4 + 800	120	1000
	7	CG	1000	100	1120	100	K4 + 1000	120	1500
250	3	CP	50	50	150	50	K4 + 50	100	500
		CG	150	100	270	100	K4 + 150	120	500
	4	CG	250	100	370	100	K4 + 250	120	500
	5	CG	350	100	470	100	K4 + 350	120	500
	6	CG	500	100	620	100	K4 + 500	120	1000
	7	CGR	650	100	770	100	K4 + 650	120	2000
500	3	CG	80	100	330	100	K4 + 80	250	500
	4	CG	150	100	400	100	K4 + 150	250	1000
	5	CGR	200	100	450	100	K4 + 200	250	1500
	6	CGR	300	100	550	100	K4 + 300	250	2500
	7	CGR	400	100	650	100	K4 + 400	250	3500
1000	3	CG	40	100	290	100	K4 + 40	250	1000
	4	CGR	70	100	320	100	K4 + 70	250	1500
	5	CGR	100	100	350	100	K4 + 100	250	2500

* Values advised for a bridge

$K4 = \frac{L60}{1200}$ with festooned supply line

K4 = K3 with supply line in blindo trolley

Channel profile system series DSC
Single beam bridge crane

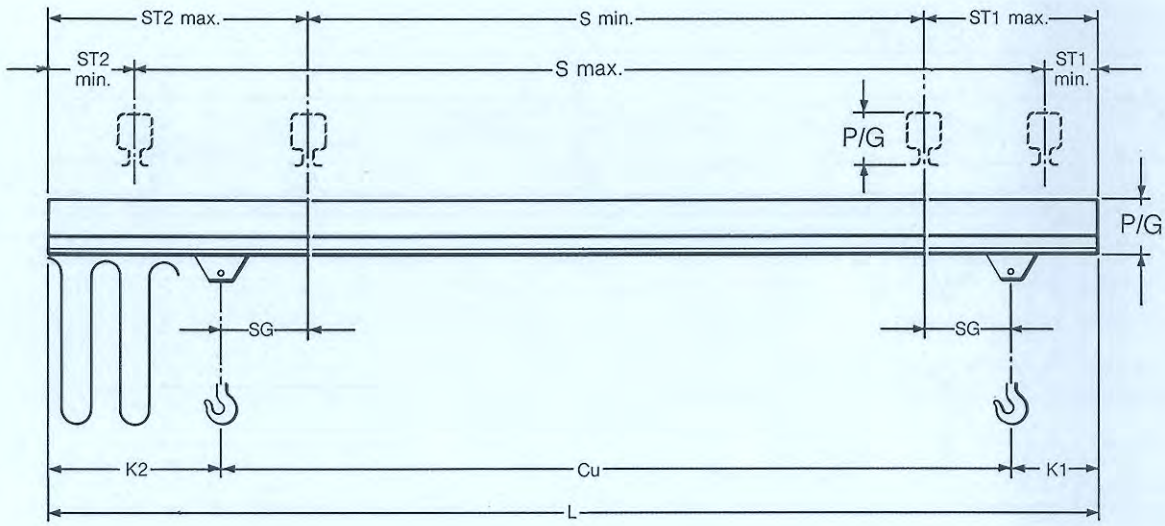

P = 110 mm
G = 170 mm

Single beam bridge crane dimensions

Capacity kg/daN	Beam length l m	Bridge beam profile Type	Hoist carrying trolley Type	Runway profile Type	Bridge carrying trolley Type	Bridge Type	Span mm S Min.	Span mm S Max.	Hook overhang mm SG Max.	Bridge beam overhang mm ST1 Min.	ST1 Max.	ST2 Min.	ST2 Max.	Approach mm K1	K2	Cu	Bridge weight kg/daN
125	3	P	CCP	P	CCP	M0103P	2400	2900	100	50	260	50	400	100	300	2600	50
				G	CCG	M0103G											
	4	P	CCP	P	CCP	M0104P	3090	3900	225	50	325	50	585	100	360	3540	60
				G	CCG	M0104G											
	5	P	CCP	P	CCP	M0105P	3660	4800	400	100	520	100	820	120	420	4460	120
				G	CCG	M0105G											
	6	G	CCG	P	CCP	M0106P	4290	5800	555	100	675	100	1035	120	480	5400	150
				G	CCG	M0106G											
	7	G	CCG	P	CCP	M0107P	4940	6800	700	100	820	100	1240	120	540	6340	180
				G	CCG	M0107G											
250	3	P	CCP	P	CCP	M0203P	2500	2900	50	50	150	50	350	100	300	2600	50
				G	CCG	M0203G											
	4	G	CCG	P	CCP	M0204P	3070	3800	225	100	345	100	585	120	360	3520	100
				G	CCG	M0204G											
	5	G	CCG	P	CCP	M0205P	3710	4800	375	50	495	100	795	120	420	4460	130
				G	CCG	M0205G											
	6	G	CCG	P	CCP/D	M0206P	4350	5800	525	100	645	100	1005	120	480	5410	160
				G	CCG	M0206G											
	7	GR	CCG	P	CCP/D	M0207P	4790	6800	775	100	895	100	1315	120	540	6340	240
				G	CCG	M0207G											
500	3	G	CCG	G	CCG	M0503G	2530	2800	25	100	145	100	325	120	300	2580	90
	4	G	CCG	G	CCG/D	M0504G	3220	3800	150	100	270	100	510	120	360	3520	120
	5	GR	CCG	G	CCG/D	M0505G	3860	4800	300	100	420	100	720	120	420	4460	180
	6	GR	CCG	G	CCG/D	M0506G	4500	5800	450	100	570	100	930	120	480	5400	220
	7	GR	CCG	G	CCG/D	M0507G	5140	6800	600	100	720	100	1140	120	540	6340	260
1000	3	G	CCG/D	G	CCG/D	M1003G	2200	2800	30	100	300	100	500	270	470	2260	110
	4	GR	CCG/D	G	CCG/D	M1004G	3090	3800	55	100	325	100	585	270	530	3200	160
	5	GR	CCG/D	G	CCG/D	M1005G	3880	4800	130	100	400	100	720	270	590	4140	200

Channel profile system series DSC
Double beam bridge crane
Special manufacture only

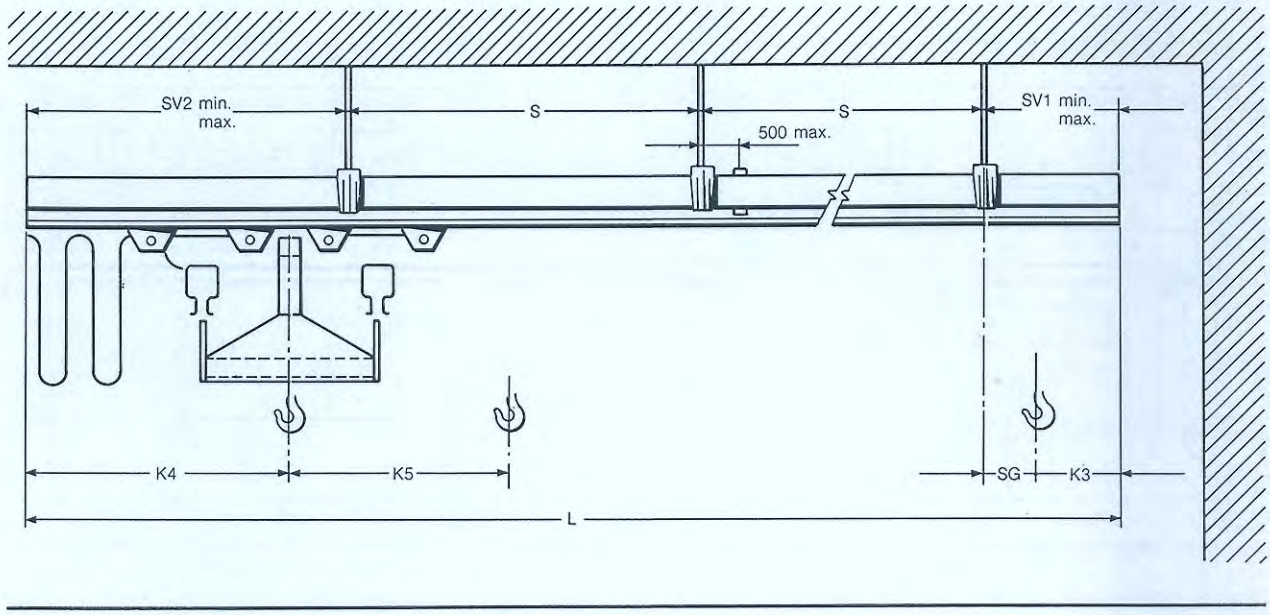

Runway dimensions for double beam bridge crane

Capacity kg	Interaxis anchorage S m	Runway profile Type	Hook overhang mm SG Max.	Runway profile overhang mm SV1 Min.	SV1 Max.	SV2 Min.	SV2 Max.	Approach mm K3	Eventual 2nd bridge K5
125	3	*CP	170	50	720	50	K4 + 170	550	
		CG	225	100	775	100	K4 + 225	550	1100
	4	*CP	220	50	770	50	K4 + 280	550	
		CG	305	100	855	100	K4 + 305	550	1200
	5	*CP	285	50	835	50	K4 + 285	550	
		CG	370	100	920	100	K4 + 370	550	1300
	6	CG	450	100	1000	100	K4 + 450	550	1500
	7	CG	525	100	1075	100	K4 + 525	550	2000
250	3	CP	110	50	660	50	K4 + 110	550	1500
		CG	170	100	720	100	K4 + 170	550	1100
	4	CP	140	50	690	50	K4 + 140	550	2000
		CG	220	100	770	100	K4 + 220	550	1200
	5	CG	285	100	835	100	K4 + 285	550	1300
	6	CG	340	100	890	100	K4 + 340	550	1500
	7	CG	400	100	950	100	K4 + 400	550	2000
500	3	CG	110	100	715	100	K4 + 110	600	1200
	4	CG	155	100	755	100	K4 + 155	600	1300
	5	CG	180	100	780	100	K4 + 180	600	1500
	6	CG	225	100	825	100	K4 + 225	600	2000
	7	CGR	265	100	865	100	K4 + 265	600	3000
1000	3	CG	70	100	670	100	K4 + 70	600	1500
	4	CG	95	100	695	100	K4 + 95	600	2000
	5	CGR	110	100	710	100	K4 + 110	600	2500

* Values advised for a bridge

$K4 = \frac{L60}{1200}$ with festooned supply line

K4 = K3 with supply line in blindo trolley

Channel profile system series DSC
Double beam bridge crane
Special manufacture only

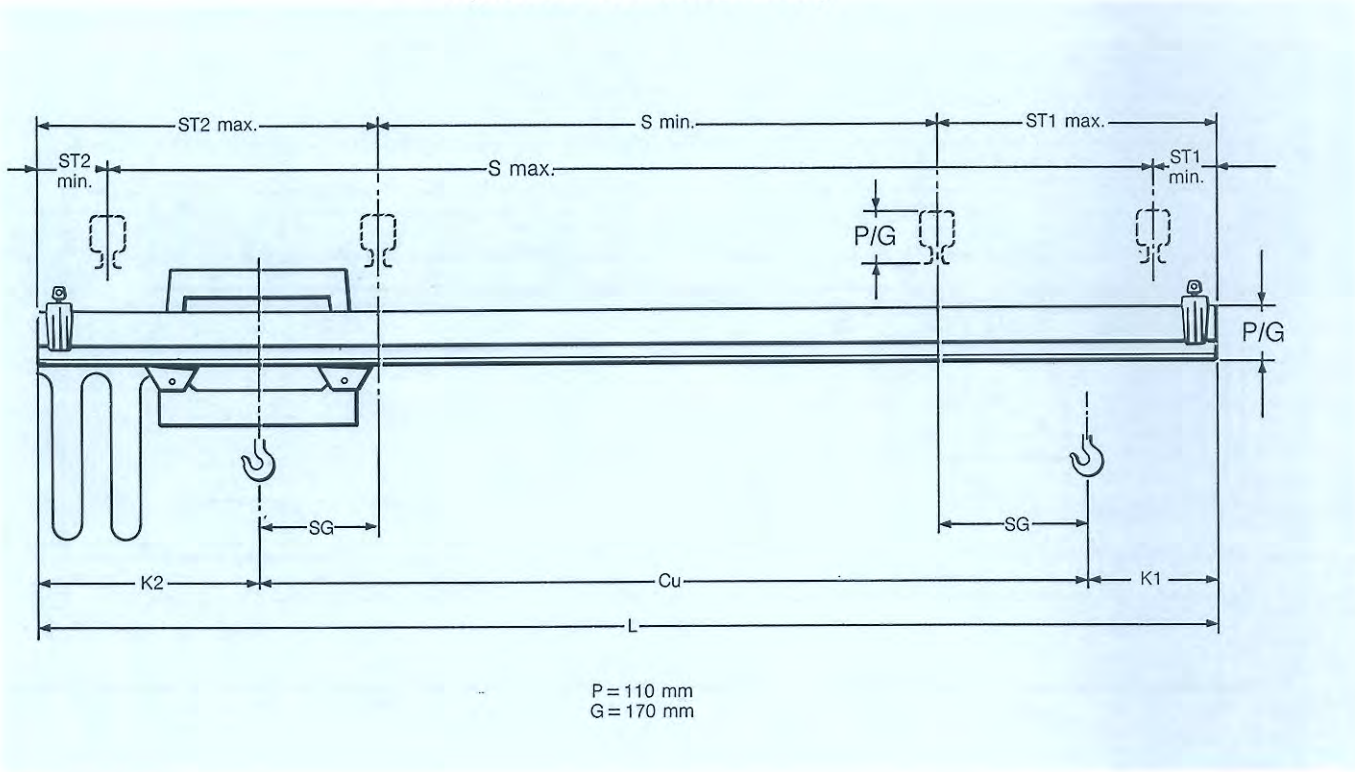

Double beam bridge crane dimensions

Capacity kg	Beam length m	Bridge beam profile Type	Hoist carrying trolley Type	Runway profile Type	Bridge carrying trolley Type	Bridge Type	Span mm S Min.	Span mm S Max.	Hook overhang mm SG Max.	Bridge beam overhang mm ST1 Min.	Bridge beam overhang mm ST1 Max.	Bridge beam overhang mm ST2 Min.	Bridge beam overhang mm ST2 Max.	Approach mm K1	Approach mm K2	Approach mm Cu	Bridge weight kg
125	4	P	CCP	P	CCP	B0104P	2540	3700	250	150	630	150	830	380	580	3040	140
				G	CCG	B0104G											
	5	P	CCP	P	CCP	B0105P	3290	4700	350	150	730	150	980	380	630	3990	210
				G	CCG	B0105G											
	6	P	CCP	P	CCP	B0106P	4040	5700	450	150	830	150	1130	380	680	4940	280
				G	CCG	B0106G											
	7	G	CCG	P	CCP	B0107P	4440	6600	690	200	1100	200	1460	410	770	5820	370
				G	CCG	B0107G											
250	4	P	CCP	P	CCP	B0204P	2640	3700	200	150	580	150	780	380	580	3040	140
				G	CCG	B0204G											
	5	G	CCG	P	CCP	B0205P	3220	4600	350	200	760	200	1020	410	670	3920	270
				G	CCG	B0205G											
	6	G	CCG	P	CCP	B0206P	3970	5600	450	200	860	200	1170	410	720	4870	320
				G	CCG	B0206G											
	7	G	CCG	P	CCP	B0207P	4720	6600	550	200	960	200	1320	410	770	5820	370
				G	CCG	B0207G											
500	4	G	CCG	G	CCG	B0504G	2570	3600	200	200	610	200	820	410	620	2970	145
	5	G	CCG	G	CCG	B0505G	3320	4600	300	200	710	200	970	410	670	3920	280
	6	G	CCG	G	CCG	B0506G	4070	5600	400	200	810	200	1120	410	720	4870	325
	7	GR	CCG	G	CCG	B0507G	4620	6600	600	200	1010	200	1370	410	770	5820	490
1000	4	G	CCG	G	CCG	B1004G	2770	3600	100	200	510	200	720	410	620	2970	150
	5	GR	CCG	G	CCG	B1005G	3520	4600	200	200	610	200	870	410	670	3920	375
	6	GR	CCG	G	CCG	B1006G	4270	5600	300	200	710	200	1020	410	720	4870	440

Channel profile system series DSC
Double beam bridge crane
Special manufacture only

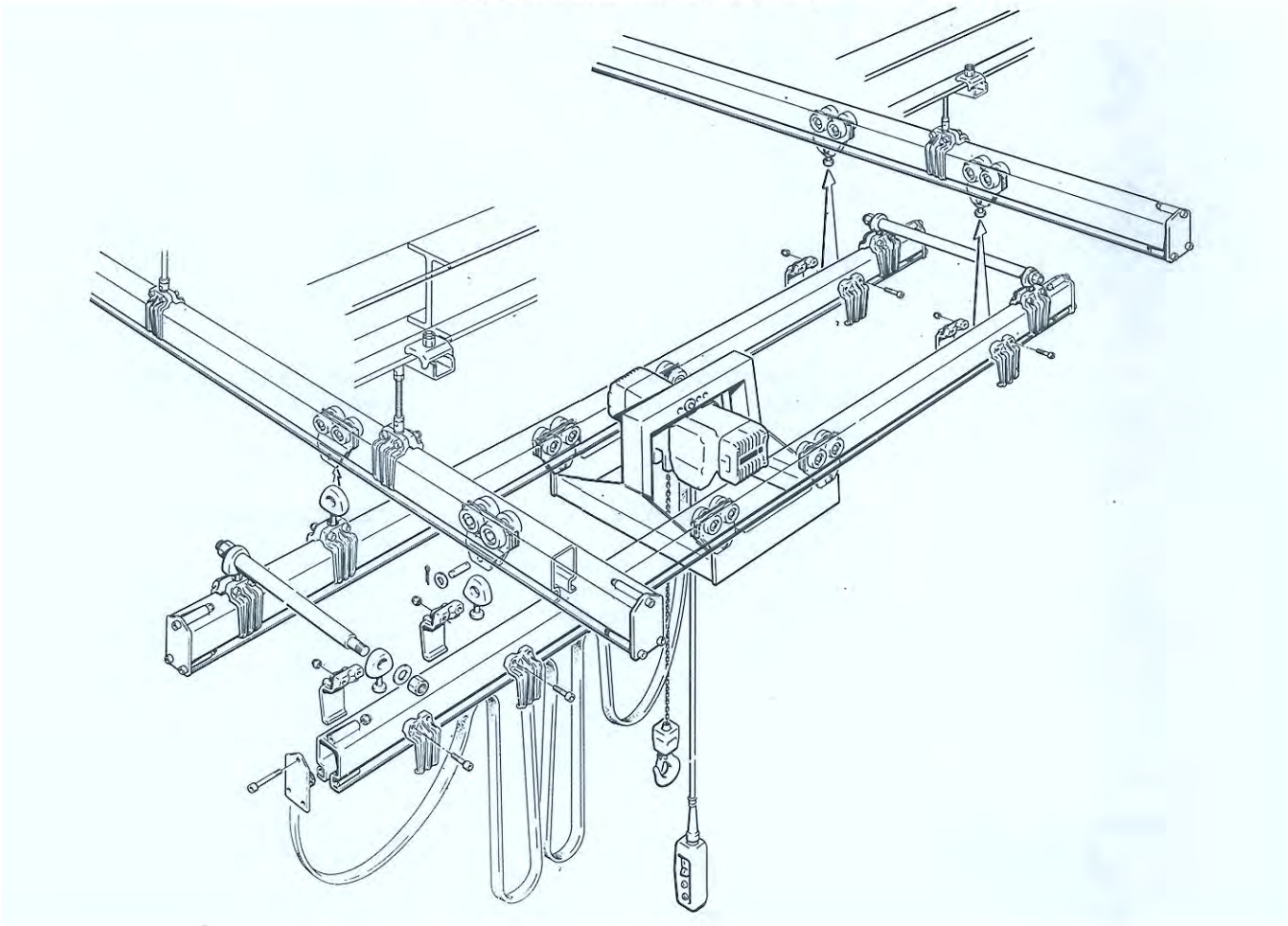

Runway in channel profile P - Bridge in channel profile P

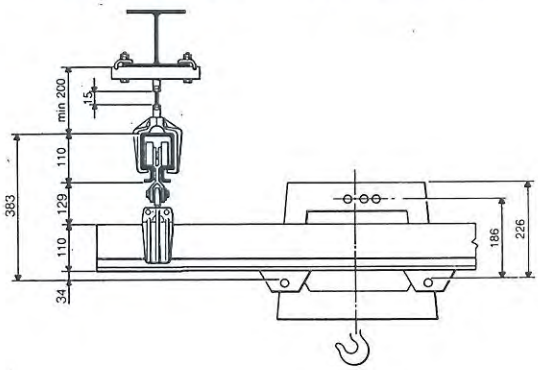

Runway in channel profile P - Bridge in channel profile G

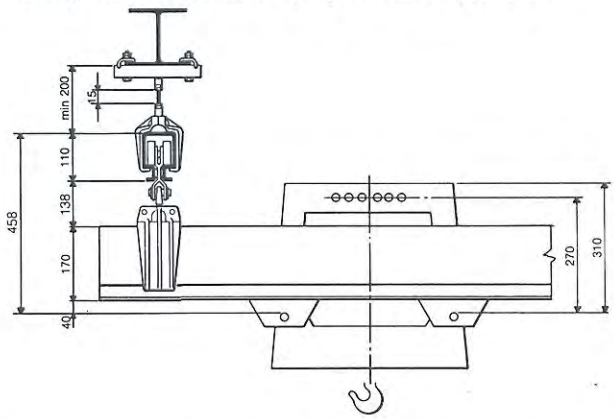

Runway in channel profile G - Bridge in channel profile P

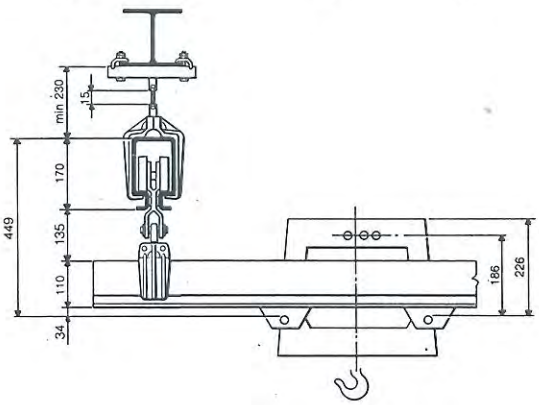

Runway in channel profile G - Bridge in channel profile G

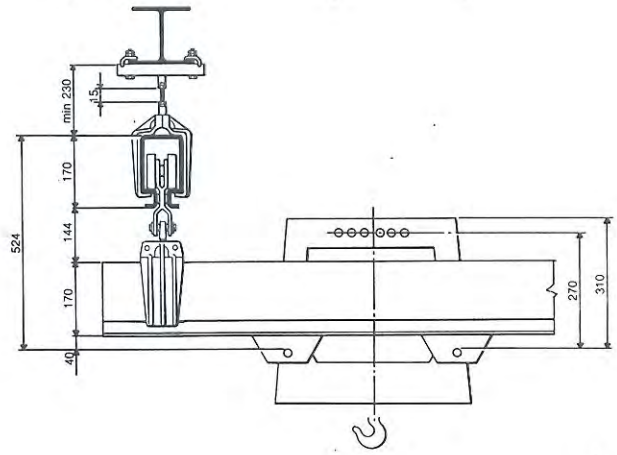

Channel profile system DSC
Components and accessories

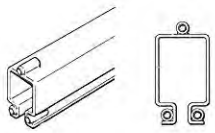

PROFILE P

JSC1P0010	L = 1 m
JSC1P0020	L = 2 m
JSC1P0030	L = 3 m
JSC1P0040	L = 4 m
JSC1P0050	L = 5 m
JSC1P0060	L = 6 m
JSC1P0070	L = 7 m

PROFILE G **PROFILE GR**

JSC1G0010		L = 1 m
JSC1G0020		L = 2 m
JSC1G0030		L = 3 m
JSC1G0040	1G0140	L = 4 m
JSC1G0050	1G0150	L = 5 m
JSC1G0060	1G0160	L = 6 m
JSC1G0070	1G0170	L = 7 m

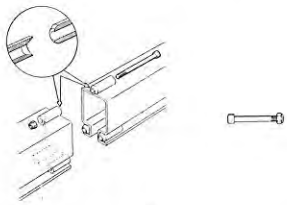

CONNECTION BOLTS KIT P
JSCA0GP00

CONNECTION BOLTS KIT G
JSCA0GG00

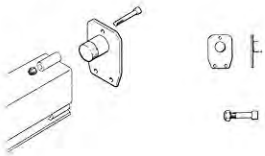

EXTREMITY COVER WITH BUFFER P
JSCA0LP00

EXTREMITY COVER WITH BUFFER G
JSCA0LG00

EXTREMITY COVER WITH LIMIT STOP P

JSCA0LP01	L = 100 mm
JSCA0LP02	L = 200 mm
JSCA0LP03	L = 300 mm
JSCA0LP04	L = 400 mm
JSCA0LP05	L = 500 mm
JSCA0LP06	L = 600 mm
JSCA0LP07	L = 700 mm
JSCA0LP08	L = 800 mm
JSCA0LP09	L = 900 mm

EXTREMITY COVER WITH LIMIT STOP G

JSCA0LG01	L = 100 mm
JSCA0LG02	L = 200 mm
JSCA0LG03	L = 300 mm
JSCA0LG04	L = 400 mm
JSCA0LG05	L = 500 mm
JSCA0LG06	L = 600 mm
JSCA0LG07	L = 700 mm
JSCA0LG08	L = 800 mm
JSCA0LG09	L = 900 mm

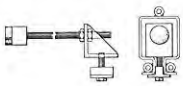

FIELD LIMIT P
JSCA0HP00

FIELD LIMIT G
JSCA0HG00

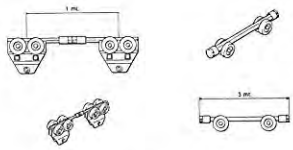

ANTICOLLISION P

JSCA0AP00	L max. = 1 m
JSCA0AP10	L max. = 3 m

ANTICOLLISION G

JSCA0AG00	L max. = 1 m
JSCA0AG10	L max. = 3 m

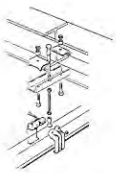

COMPLETE SUSPENSION FOR RUNWAY P

JSCA0MP01	L = 100 mm
JSCA0MP11	L = 500 mm
JSCA0MP21	L = 1000 mm

COMPLETE SUSPENSION FOR RUNWAY G

JSCA0MG00	L = 100 mm
JSCA0MG10	L = 500 mm
JSCA0MG20	L = 1000 mm

SUSPENSION WITH ARTICULATED ROUND HEADED BOLT P
JSCA0VP01

SUSPENSION WITH ARTICULATED ROUND HEADED BOLT G
JSCA0VG00

COMPLETE SUSPENSION FOR BRIDGE CRANE P
JSCA0PP01

COMPLETE SUSPENSION FOR BRIDGE CRANE G
JSCA0PG00

ANCHORAGE TRANSVERSE P
Indicate the type of profile

ANCHORAGE TRANSVERSE G
Indicate the type of profile

SUSPENSION CLIP P
JSC0P0011

SUSPENSION CLIP G
JSC0G0010

ARTICULATED ROUND HEADED SUSPENSION BOLTS P
JSC0P0020

ARTICULATED ROUND HEADED SUSPENSION BOLTS G
JSC0G0020

THREADED STAYBOLTS P

JSC5P0080	L =	100 mm M 12 x 1,5
JSC5P0090	L =	500 mm M 12 x 1,5
C13012000	L =	1000 mm M 12 x 1,5

THREADED STAYBOLTS G

JSC5G0080	L =	100 mm M 16 x 1,5
JSC5G0090	L =	500 mm M 16 x 1,5
C13016000	L =	1000 mm M 16 x 1,5

HEXAGONAL NUTS FOR THREADED STAYBOLTS P

B06012001 M 12 x 1,5

HEXAGONAL NUTS FOR THREADED STAYBOLTS G

B06016000 M 16 x 1,5

EYEBOLT SUSPENSION BRIDGE P

JSC0P0050

EYEBOLT SUSPENSION BRIDGE G

JSC0G0050

SIMPLE TROLLEY P

0CCP00000

SIMPLE TROLLEY G

0CCG00000

DOUBLE TROLLEY P

CCPD00000

DOUBLE TROLLEY G

CCGD00000

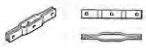

TRANSVERSE FOR DOUBLE TROLLY P

GBCCCP040

TRANSVERSE FOR DOUBLE TROLLY G

GBCCCG040

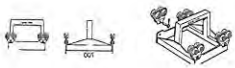

DOUBLE BEAM TROLLEY P

JSCA0BP00

DOUBLE BEAM TROLLEY G

JSCA0BG00

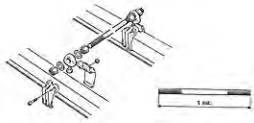

DOUBLE STAYBOLT P

JSCA0DP01

DOUBLE STAYBOLT G

JSCA0DG00

ELECTRICAL ACCESSORIES

CABLE CARRYING SLIDES

E58000000

CABLE CARRYING SLIDES

E58000000

CABLE CARRYING TROLLEYS P

JSCA0CP00

CABLE CARRYING TROLLEYS G

JSCA0CG00

ROUND CABLE

E08004150	4 x 1,5 mm²
E08004250	4 x 2,5 mm²

ROUND CABLE

E08004150	4 x 1,5 mm²
E08004250	4 x 2,5 mm²

FLAT CABLE

E0800415P	4 x 1,5 mm²
E0800425P	4 x 2,5 mm²

FLAT CABLE

E0800415P	4 x 1,5 mm²
E0800425P	4 x 2,5 mm²

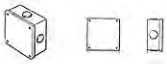

JUNCTION BOX WITH CLAMPS

E14250306	4 x 6 mm²
E14250316	4 x 16 mm²
E14335335	4 x 35 mm²

JUNCTION BOX WITH CLAMPS

E14250306	4 x 6 mm²
E14250316	4 x 16 mm²
E14335335	4 x 35 mm²

SWITCH WITH FUSES

E31025000	25 A
E31040000	40 A

SWITCH WITH FUSES

E31025000	25 A
E31040000	40 A

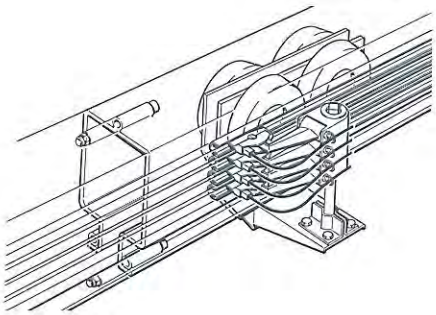

CONDUCTION RUNWAY WITH TENSION INTAKE TROLLEY

On request

Installation procedure

The installation shall always be performed by suitably trained personnel able to assess the effects of the actions performed. Special care shall be taken when installing the system at high height, where the use of special equipment and tools is required, and in particular when height is higher than 5 m.
The characteristics of the installation site may compel the user to change the installation procedure, to the point that it is impossible to lay down a "good-for-all" installation procedure. The installation procedure shall, therefore, be defined during the design of the installation, taking into consideration all the characteristics of the system defined in the mentioned catalog. The special instructions concerning the installation of the tie-rods and suspension stirrups are conversely indicated hereafter, as some clarifications may be needed.

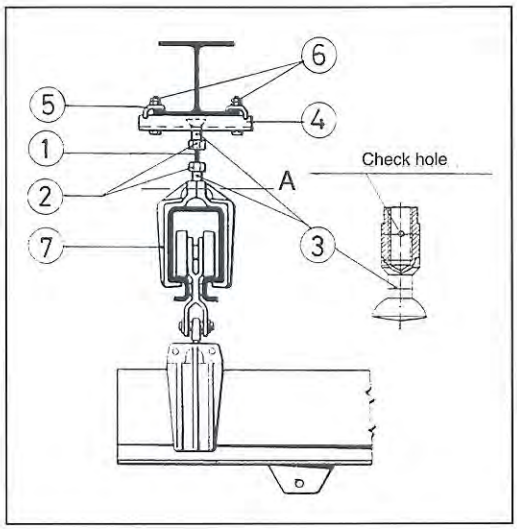

pos.	description
1	tie-rod
2	hexagon nut
3	spherical head articulated rod
4	cross-beam
5	clamp
6	bolt
7	stirrup
8	bolt
9	washer

Sect. A

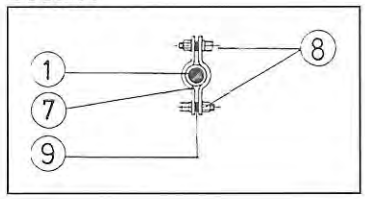

Refer to the figure. The recommended installation procedure is the following:

1) insert the spherical head articulated rod (3) in the cross-beam (4);
2) tighten the two nuts (2) at the two ends of the tie rods (1);
3) screw the spherical head articulated rod (3) to one end of the tie rod (1) until the check hole on the rod body gets closed;
4) fully tighten the tie-rods fitted to the articulated rods (3) previously inserted in the crossbeams (4);
5) install the stirrups (7) in the free end of the articulated rods (end opposite to that of the tie rods), and fit two washers (9) (CP variant only). Do not tighten the bolts (8) so that the stirrups can be spread to receive the channel (note: the two bolts shall be installed "vis-à-vis");
6) install the crossbeams (4) on the supporting structures according to the design requirements;
7) lift the channel lengths until you can insert them in the stirrups in the correct design positions. Tighten the bolts (8) to a torque of 26.4 Nm (screws M 8), and 50.1 (screws M 10). Fasten each channel length to the subsequent one with the pins and screws already fitted to the heads.
   Take care to install the trolleys before installing the last channel section unless you can do so from the heads when the installation is completed;
8) check the alignment of the craneways, using the plays on the attachment bolt holes to adjust when possible. When the alignment is completed, the tie-rods shall not be inclined more than 2°. If this condition is not met, change the installation by installing special crossbeams or other suitable devices or solutions able to permit the said requirement to be met;
9) in the case of twin craneways for bridge cranes, check that the mutual alignment is within the limits specified in standard FEM 1001. To this purpose, please find the applicable paragraphs of this standard enclosed herewith. **The allowable misalignment, both in the longitudinal direction for each one of the craneways, and transversally between the craneways, is in the order of magnitude of 0.5 per mill, i.e. 0.5 mm per meter;**
10) to adjust, loosen the upper articulated rod (3) or tighten the lower articulated rod. Always check that the check hole does not become free. A free hole indicates an incorrect engagement of the tie-rod in its threaded housing, and this involves the hazard of possible separation;
11) check the alignment again;
12) tighten the nuts (2) to a torque of 45.5 Nm and 107 Nm for the M 12 and M 16 nuts respectively, use a 19 wrench for the M 12 nuts, and a 24 wrench for the M 16 nuts.

Maintenance

Maintenance is limited to the following:

1) after the first 150 hours of operation, check the alignments, the levels and the torque of all screwed connections;

2) repeat the same operation every year;

3) touch up the corrosion-protection coating if it appears to be damaged beyond grade 6 as defined in the SIS standards;

4) perform the maintenance of the hoist in accordance with the instructions of the Manufacturer.

HIGH QUALITY PRODUCTS BY A LEADING MANUFACTURER

- *Donati Sollevamenti was founded in 1930, and has since operated in the hoisting and material handling sector by manufacturing a wide range of products designed to hoist light and medium loads.*

- *Donati Sollevamenti is one of the few companies worldwide that is able to supply a complete range of electrically-operated devices and hoisting equipment produced in series. All its products are manufactured by use of high-quality materials and leading edge technologies, and are thus capable of satisfying the requirements of the international market.*

- *Donati Sollevamenti production range includes electric chain and wire-rope hoists of different sizes, winches, jib cranes with manually or electrically-operated jib, overhead transport systems, travelling units suitable for use in the most diverse applications in the manufacturing industry and at distribution centers.*

Donati Sollevamenti S.r.l.
via Roma, 55 - 21020 Daverio (Va)
tel. 0332/942611 fax 0332/948597

Manual NO. MAN 072001 - GB